INSTRUCTIONS FOR

31cc Petrol Line Trimmer

Stock No.31553 **Part No.GTP7**

IMPORTANT: PLEASE READ THESE INSTRUCTIONS CAREFULLY TO ENSURE THE SAFE AND EFFECTIVE USE OF THIS PRODUCT.

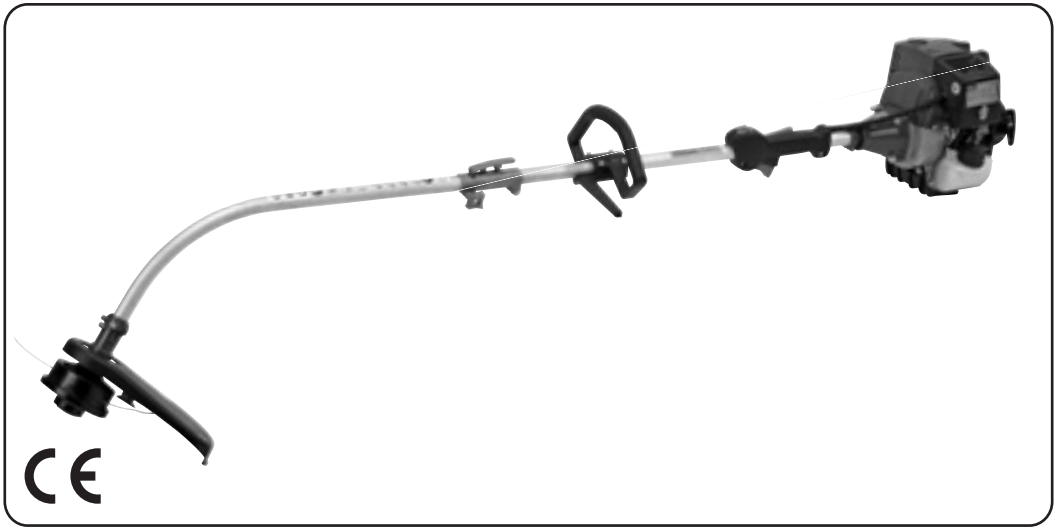

GENERAL INFORMATION

These instructions accompanying the product are the original instructions. This document is part of the product, keep it for the life of the product passing it on to any subsequent holder of the product. Read all these instructions before assembling, operating or maintaining this product.

This manual has been compiled by Draper Tools describing the purpose for which the product has been designed, and contains all the necessary information to ensure its correct and safe use. By following all the general safety instructions contained in this manual, it will ensure both product and operator safety, together with longer life of the product itself.

All photographs and drawings in this manual are supplied by Draper Tools to help illustrate the operation of the product.

Whilst every effort has been made to ensure the accuracy of information contained in this manual, the Draper Tools policy of continuous improvement determines the right to make modifications without prior warning.

1. TITLE PAGE

1.1 INTRODUCTION:

USER MANUAL FOR:

31cc PETROL LINE TRIMMER

Stock no. 31553
Part no. GTP7

1.2 REVISIONS:

Date first published June 2013

As our user manuals are continually updated, users should make sure that they use the very latest version.

Downloads are available from: http://www.drapertools.com/b2c/b2cmanuals.pgm

DRAPER TOOLS LIMITED
HURSLEY ROAD
CHANDLER'S FORD
EASTLEIGH
HAMPSHIRE
SO53 1YF UK

WEBSITE: www.drapertools.com
PRODUCT HELPLINE: +44 (0) 23 8049 4344
GENERAL FAX: +44 (0) 23 8026 0784

1.3 UNDERSTANDING THIS MANUALS SAFETY CONTENT:

WARNING! Information that draws attention to the risk of injury or death.

CAUTION! Information that draws attention to the risk of damage to the product or surroundings.

1.4 COPYRIGHT © NOTICE:

Copyright © Draper Tools Limited.
Permission is granted to reproduce this publication for personal & educational use only.
Commercial copying, redistribution, hiring or lending is prohibited.
No part of this publication may be stored in a retrieval system or transmitted in any other form or means without written permission from Draper Tools Limited.

In all cases this copyright notice must remain intact.

2. CONTENTS

2.1 CONTENTS

Page content ***Page***

1 TITLE PAGE
- 1.1 INTRODUCTION 2
- 1.2 REVISION HISTORY 2
- 1.3 UNDERSTANDING THIS MANUAL 2
- 1.4 COPYRIGHT NOTICE 2

2 CONTENTS
- 2.1 CONTENTS 3

3 GUARANTEE
- 3.1 GUARANTEE 4

4 INTRODUCTION
- 4.1 SCOPE 5
- 4.2 SPECIFICATION 5
- 4.3 HANDLING & STORAGE 5

5 HEALTH & SAFETY INFORMATION
- 5.1 GENERAL SAFETY INSTRUCTIONS FOR PETROL LINE TRIMMER USE 6
- 5.2 HEALTH & SAFETY INFORMATION CONCERNING THE USE OF FUELS 8

6 TECHNICAL DESCRIPTION
- 6.1 IDENTIFICATION 10B
- 6.2 MAIN COMPONENT DESCRIPTIONS 10A

7 UNPACKING & CHECKING
- 7.1 PACKAGING 11
- 7.2 WHAT'S IN THE BOX? 11

8 ASSEMBLY
- 8.1 ATTACHING THE FRONT HANDLE 12
- 8.2 CONNECTING THE CUTTING HEAD ATTACHMENT 12

9 OPERATION AND USE
- 9.1 FUELLING 13
- 9.2 CORRECT STANCE 13
- 9.3 STARTING THE ENGINE 14

10 MAINTENANCE
- 10.1 SPARK PLUG MAINTENANCE 15
- 10.2 ENGINE IDLE SPEED ADJUSTMENT 15
- 10.3 STORAGE 16
- 10.4 REPLACING THE FUEL FILTER 16
- 10.5 REPLACING THE AIR FILTER 16

11 TROUBLESHOOTING 17

12 DISPOSAL 18
- 12.1 DISPOSAL 18

13 EXPLANATION OF SYMBOLS 19

DECLARATION OF CONFORMITY ..... ENCLOSED

3. GUARANTEE

3.1 GUARANTEE

Draper tools have been carefully tested and inspected before shipment and are guaranteed to be free from defective materials and workmanship.

Should the tool develop a fault, please return the complete tool to your nearest distributor or contact Draper Tools Limited, Chandler's Ford, Eastleigh, Hampshire, SO53 1YF. England. Telephone Sales Desk: (023) 8049 4333 or Product Helpline (023) 8049 4344.

A proof of purchase must be provided with the tool.

If upon inspection it is found that the fault occurring is due to defective materials or workmanship, repairs will be carried out free of charge. This guarantee period covering parts/labour is 12 months from the date of purchase except where tools are hired out when the guarantee period is ninety days from the date of purchase. The guarantee is extended to 24 months for parts only. This guarantee does not apply to normal wear and tear, nor does it cover any damage caused by misuse, careless or unsafe handling, alterations, accidents, or repairs attempted or made by any personnel other than the authorised Draper warranty repair agent.

Note: If the tool is found not to be within the terms of warranty, repairs and carriage charges will be quoted and made accordingly.

This guarantee applies in lieu of any other guarantee expressed or implied and variations of its terms are not authorised.

Your Draper guarantee is not effective unless you can produce upon request a dated receipt or invoice to verify your proof of purchase within the guarantee period.

Please note that this guarantee is an additional benefit and does not affect your statutory rights.

Draper Tools Limited.

4. INTRODUCTION

4.1 SCOPE

This 4-stroke grass trimmer is designed for domestic use around the garden.

ATTENTION: any other application is considered misuse.

4.2 SPECIFICATION

Stock no	31553
Part no	GTP7
Fuel tank volume	550cm^3
Engine displacement	31cm^3
Maximum engine performance[1]	0.80kW
Engine speed (rotational frequency)[2]	8,000^{-1}
Engine speed (rotational frequency)[3]	2,900^{-1}
Fuel consumption[1] at maximum engine performance	722g/kWh
Sound pressure level (A-weighted L_{pA}av)[4]	102db(A)
Sound power level (A-weighted L_{pA}av)[4]	114db(A)
Single value noise level[5]	112db(A)
Vibration level[6]	10.5m/s^2
Weight (power unit, without fuel only)	7kg

[1] In accordance to ISO 8893.

[2] At recommended maximum spindle rotational frequency.

[3] At idling.

[4] In accordance to BS EN ISO 22868.

[5] A-weighted sound pressure level in accordance to 2000/14/EC.

[6] In accordance to BS EN ISO 22867.

The declared vibration total value has been measured in accordance with a standard test method and may be used for comparing one tool with another.

The declared vibration total value may also be used in a preliminary assessment of exposure.

WARNING!: The vibration emission during actual use of the power tool can differ from the declared total value depending on the ways in which the tool is used.

WARNING!: Identify safety measures to protect the operator that are based on an estimation of exposure in the actual conditions of use (taking account of all parts of the operating cycle such as the times when the tool is switched off and when it is running idle in addition to the trigger time.

4.3 HANDLING AND STORAGE

Take care when handling and lifting. Do not drop this machine. Always wear suitable personal protective equipment, ear defenders, face protection and helmet, as well as gloves and safety footwear. Store in a dry location out of the reach of children.

INFORMATION: For more concise information on the maintenance and storage of this machine, see page 15, chapter 10. Maintenance.

5. HEALTH & SAFETY INFORMATION

Have this tool repaired by a qualified person. This tool is designed to confirm to the relevant international and local standards and as such should be maintained and repaired by someone qualified; using only original parts supplied by the manufacturer: This will ensure the tool remains safe to use.

5.1 GENERAL SAFETY INSTRUCTIONS FOR PETROL LINE TRIMMER USE

WARNING! For your safety, please read and understand these instructions before assembling, operating or maintaining this machine.

WARNING! Read the instructions carefully.

Never attempt to modify or operate a modified machine. Fully assemble this machine, including all relevant guards, before operating.

Do not operate this machine without being completely familiar with the safety features and how to operate them.

Never operate this machine if the stop switch is faulty or not functioning.

Never operate this machine while tired, ill or under the influence of drugs.

DANGER! Keep out of the reach of children.

Refer to the instructions supplied with the attachment. Fully read and understand before attempting to assemble, operate or maintain the attachment.

Never allow people unfamiliar with these instructions to operate this machine. Local regulations may restrict the age of the operator.

Prior to each use, inspect the machine for signs of damage. Make sure the safety features are present and functioning and that all visible nuts, bolts and screws remain tight. Vibration from normal use can cause them to loosen over time.

Never operate this machine with defective or missing guards.

WARNING! Use of this product can pose a danger to wildlife. Before attempting to use this machine, check the area, particularly long grass and under bushes for signs of life: if necessary relocate.

NOTE: Not all animals will be deterred by the noise of the product alone.

Do not operate this machine near animals or bystanders.

Check the attachment is correctly fitted to the machine before attempting to start the engine.

CAUTION! As the user you are responsible for any injury to people or damage to property.

Never leave this machine running when not in use or leave the it unattended during use.

WARNING! During use the engine gets very hot. Do not touch it, especially the exhaust.

Always be aware of your surroundings, staying alert for possible hazards that you may not hear over the noise of the engine.

Always wear appropriate PPE [Personal Protective Equipment].

- Safety goggles must be worn to protect your eyes from debris.
- Ear defenders must be worn to prevent damage to your hearing.
- Gloves to help reduce vibration fatigue.

5. HEALTH & SAFETY INFORMATION

Wear fitted clothing and remove items likely to become drawn in, for example, ties, scarfs, and jewellery. Also, if applicable, tie back long hair.

For outdoor use only.

Stop the engine before adjusting, refuelling or maintaining anything on this machine.

Always maintain a safe and secure position on level ground while operating this product. Beware of the conditions under foot. If work on a slope is unavoidable, always be sure of your footing.

Keep all handles and switches free from oil, fuel and moisture.

Always operate the machine with two hands.

Make sure the attachment does not operate while the machine is at idle.

Only use fresh, clean, and good quality unleaded fuel.

Stop the engine and allow it to cool before refuelling.

Never refuel in close proximity to naked flames, sparks or other sources of ignition for example cigarettes.

Take care when filling and use a funnel to prevent any spillage. Should a spillage occur, immediately use a suitable rag to clean up any residue.

Handle and store fuel with care as it is highly flammable.

Do not inhale fuel or exhaust fumes as they are toxic.

To reduce the risk of fire, keep the engine and exhaust free from debris, oil and fuel.

Do not set this machine down on or near easily combustible material, for example dry leaves or grass.

5.2 HEALTH AND SAFETY INFORMATION CONCERNING THE USE OF FUELS

Fuels are inflammable and explosive. Reduce the risk of explosion and fire by:

– Turning off and cooling the motor down before filling the tank with fuel.
– Refraining from smoking and starting open fires when handling fuels.
– Storing and mixing fuels in approved and correspondingly labelled canisters.
– Storing fuels in closed containers. Keeping in mind that fuels may evaporate at room temperature and collect on the floor of closed rooms (risk of explosion).
– Start the device at least nine metres away from the machine.

Fuels are toxic, they contain substances that have an immediate toxic effect and may cause permanent damage to your health. Take all precautionary measures to prevent your body from absorbing any of these substances:

– Tank and siphon fuels only outdoors or in well-ventilated rooms.
– Do not inhale fuel fumes.
– Avoid contact with eyes and skin.
– Wear gloves when transferring fuel.
– When fuel has come into contact with your clothes, change them immediately. Clean your clothes before putting them back on.
– Store fuels out of the reach of children.

When handled inappropriately, fuels may cause damage to the environment:

– Transfer fuel carefully. Fuel must never trickle into the ground or the sewage system.
– Dispose of any remaining fuel in an appropriate manner. Never dispose of fuel with regular household waste.
– Fuels may be stored only for a limited time. Purchase only such quantities that can be used up within a few months.

Blank page

Blank page

6. TECHNICAL DESCRIPTION

6.1 IDENTIFICATION

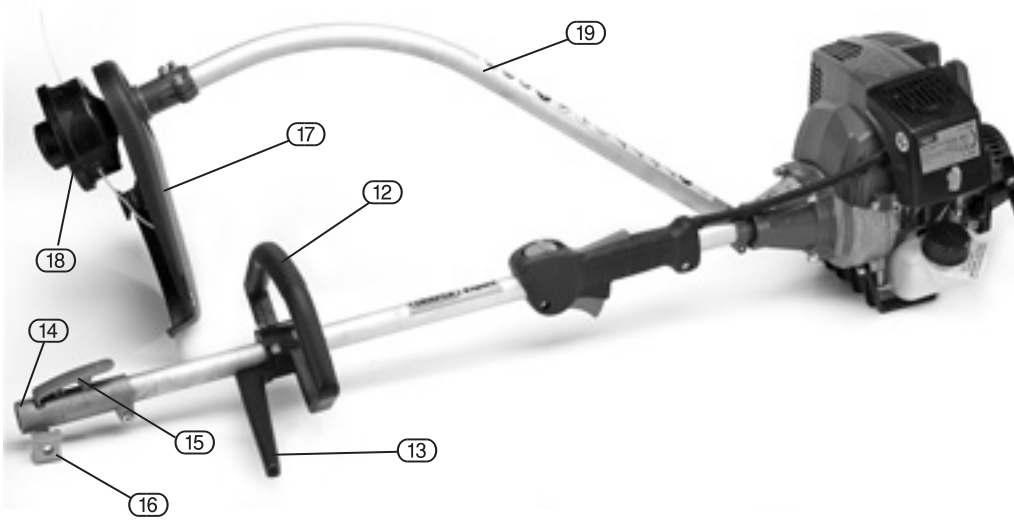

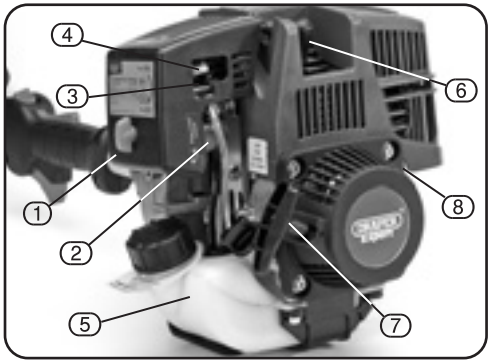

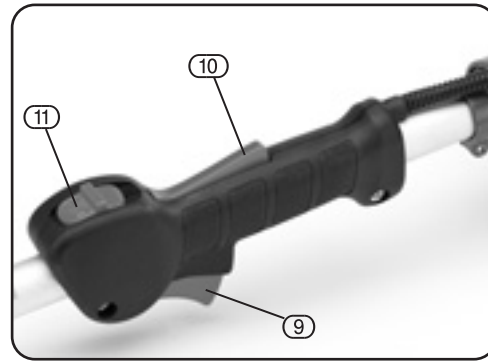

4-stroke engine:

① Air filter housing.
② Fuel primer.
③ Carburettor.
④ Choke lever.
⑤ Fuel tank.
⑥ Spark plug cover (H.T. lead).
⑦ Pull start assembly.
⑧ Exhaust.

Rear handle:

⑨ Throttle lever.
⑩ Throttle release lever.
⑪ Engine stop switch.

Output shaft:

⑫ Front (auxiliary) handle.
⑬ Reaction bar.
⑭ P.T.O (power take off).
⑮ P.T.O release button.
⑯ P.T.O locking bolt.

Line trimmer cutting attachment:

⑰ Safety guard.
⑱ Line spool.
⑲ Attachment shaft.

6.2 MAIN COMPONENT DESCRIPTIONS

(2) **Fuel primer:**
This is pressed to draw fuel from the fuel tank to the carburettor.

(4) **Choke lever:**
Move the choke lever to the **'On/Choke'** position for initial engine starting. Choke should be set to **'Off'** once the engine is warm or you are restarting a warm engine.

(10) **Throttle release lever:**
This lever is a safety device and its suction is to lock the throttle and avoid any accidental acceleration due to the throttle trigger being depressed by accident. Only when you have a firm grip on the handle and have the lever fully depressed will the throttle trigger function.

(11) **Engine stop switch:**
Use this switch to stop the engine. Ensure that all rotating parts have stopped before setting the machine down.

(15) **Power take off release button:**
This button will, when pressed, disengage a locking lug from securing the grass trimmer attachment.

(16) **Power take off locking bolt:**
This bolt is used to fix the grass trimmer attachment firmly once it has been retained by the locking lug of the **power take off release button.**

7. UNPACKING & CHECKING

7.1 PACKAGING

Carefully remove the petrol line trimmer from the packaging and examine it for any sign of damage that may have happened during shipping. Lay the contents out and check them against the parts shown below. If any part is damaged or missing; please contact the Draper Helpline (the telephone number appears on the Title page) and do not attempt to use the machine.

The packaging material should be retained at least during the guarantee period: in case the machine needs to be returned for repair.

Warning! Some of the packaging materials used may be harmful to children. Do not leave any of these materials in the reach of children.

If any of the packaging is to be thrown away, make sure they are disposed of correctly; according to local regulations.

7.2 WHAT´S IN THE BOX?

As well as the petrol line trimmer there are several attaching parts.

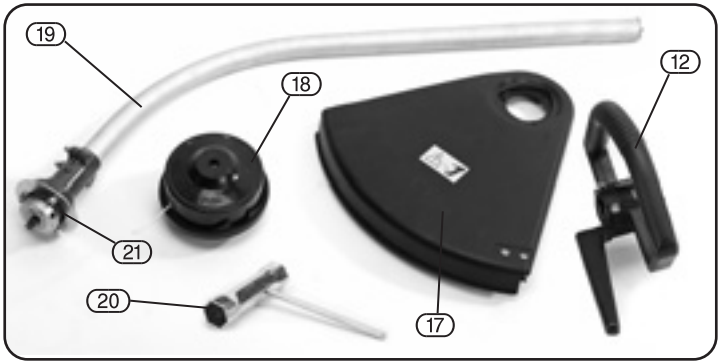

(12) Front (auxiliary) handle.
(17) Safety guard.
(18) Line spool.
(19) Front handle.
(20) Combination tool.
(21) Line trimmer head.

8. ASSEMBLY

8.1 ATTACHING THE FRONT HANDLE (FIG.1):

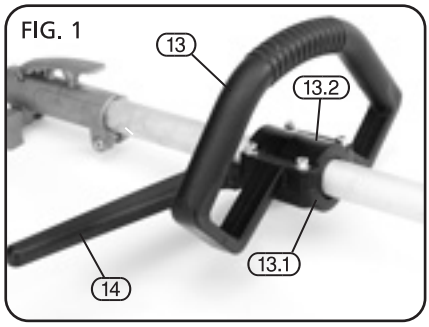

WARNING! This machine must be operated with two hands at all times. Attach the handle and reaction bar on the output shaft, a comfortable distance from the rear handle.

i Before fitting the handle (13), refer to page 10.B, chapter 6. IDENTIFICATION GUIDE to make sure you are positioning it correctly with the reaction bar (14) pointing to the left.

i. Push the lower bracket (13.1) on to the underside of output shaft.

ii. Align the hole in the handle with those in the upper bracket (13.2) and push it on to the output shaft.

iii. With the four 4mm hex. socket head bolt and washers, fix the two halves together.

The lower bracket has four nuts recessed in the back.

iv. Before tightening the bolts, make sure the distance from the rear handle is comfortable and that the reaction bar is level. Clamp the handle tight.

8.2 CONNECTING THE CUTTING HEAD ATTACHMENT (FIG.2)

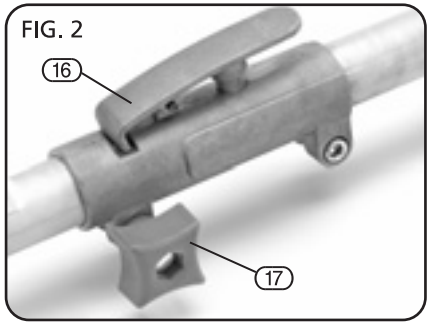

The line trimmer is attached to the main unit by interlocking the shaft of the line trimmer into the power take off shaft of the main unit whilst pressing and holding the power take off release button (16) and releasing when the two shafts are locked in place. Finally, tighten the power take off locking bolt (17) to make the machine totally secure.

Do not attempt to connect non-genuine accessories as it may result in injury or cause damage to this machine.

9. OPERATION AND USE

9.1 FUELLING (FIG.3):

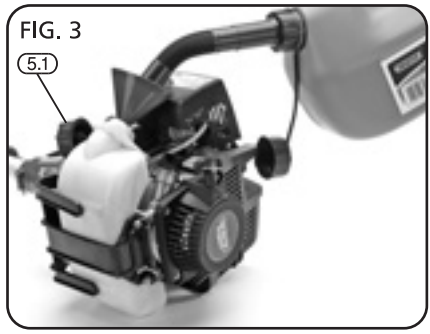

FIG. 3

This Draper petrol product is powered by a 4 stroke engine which **MUST** be filled with **unleaded fuel.** As this is a 4-stroke machine you must also add oil to the sump. The correct grade of oil to use is **SAE 10W-30.**

Any machine returned under warranty which is found to have failed due to a lack of lubrication will be considered a chargeable repair.

Only use fresh, clean, and good quality unleaded fuel.

Before attempting to fuel this machine make sure you have completely read and understood the safety instructions.
DANGER! Fuel is highly flammable.

i. Open the fuel cap (5.1) by turning it anticlockwise. Hang it to one side so that it does not block the opening.

iii. Carefully pour clean, unleaded fuel into the fuel tank filling it while taking care not to spill or waste any. Have a rag to hand to clean away any residue or spilt fuel.

iv. Replace the fuel cap making sure it is seated properly before tightening clockwise. If the threads become crossed it will damage the tank. It may also result in fuel leaking out during use and potentially igniting fire.

Note: Using fuel that has degraded will cause starting/running problems.

9.2 CORRECT STANCE (FIG.4):

This machine must be operated on the right hand side of your body and firmly held with both hands at all times. Hold the rear handle with your right hand and the front handle with your left.

FIG. 4

9. OPERATION AND USE

Do not attempt to start this machine until you have read and understood all the safety instructions.

9.4 STARTING THE ENGINE (FIGS.5 - 7)

WARNING! In an emergency, slide the engine stop switch (I) forward to kill the engine.

i. Slide the engine stop switch (12) backward.

ii. Grip the front handle: squeeze [and hold] the throttle release lever (10), followed by the throttle lever (9).

iii. Press the throttle lock button (11) while releasing the throttle release lever (10) and throttle lever (9).

The lock button will remain down holding the throttle in the start position.

iv. **Cold starts** - close the choke to restrict the amount of air entering the engine. Slide the choke lever (4) to the position.

Warm starts - open the choke to increase the amount of air entering the engine. Slide the choke lever (4) to the position.

v. Prime the engine with fuel. Press the fuel primer (2) 3 or 4 times. The primer (2) and fuel line from the tank should have fuel present.

ATTENTION! Over priming will cause the engine to flood with too much fuel. This will engulf the spark plug and stop the engine from starting. There will be a stronger smell of fuel when this occurs.

vi. Grip the neck of the motor unit with your left hand holding the machine firmly on the ground. Crouch over the machine while maintaining firm footing.

ATTENTION! Do not stand or apply any pressure on to the output shaft.

vii. With your right hand hold the pull start handle (7).

viii. Make 2 or 3 short, sharp pulls of the starter or until the engine starts. If the engine does not start by the fifth crank, move the choke setting.

WARNING! Do not pull the starter rope out fully as it may break. Do not release the starter rope and allow it to recoil unaided.

ix. When the engine starts, pull throttle lever (9) to release the 'start' position.

x. When the engine has been running for a few minutes open the choke fully.

ATTENTION! The majority of engines have an initial period in which the internal components bed themselves in. This engine is no different. During this the first 5 or 6 tank fulls [bedding in period], running the engine in the very high rev. range must be avoided as the stresses involved can cause damage to the engine.

FIG. 5

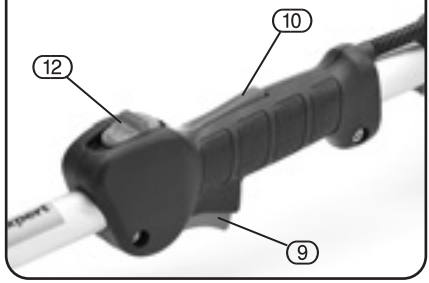

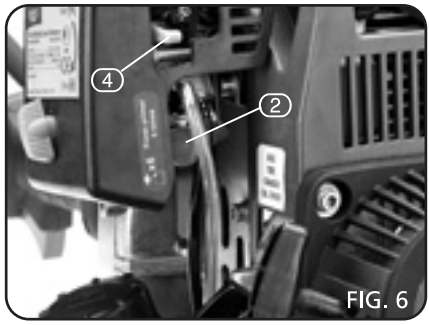

FIG. 6

FIG. 7

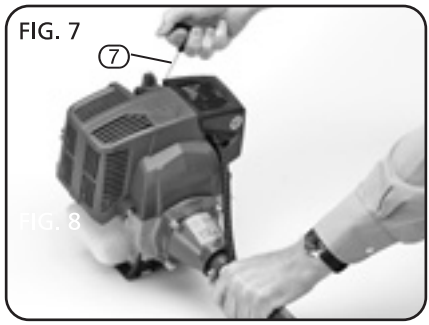

FIG. 8

10. MAINTENANCE

10.1 SPARK PLUG MAINTENANCE (FIGS.8 – 10):

Over time the spark plug can become contaminated. This can be due to adverse running conditions such as, working with part throttle for a prolonged period or a fuel mix containing too much oil. This contamination can build up causing the engine to run roughly, reduce the fuel consumption or create starting problems.

i. Without using any tools [so as to avoid damaging the H.T. lead] remove the lead (6) from the back of the spark plug (6.1).

ii. With the combination tool (21), turn the spark plug (7) anticlockwise to remove it.

iii. Clean the spark plug and check the electrode gap. Maintain a gap of 0.6 to 0.7mm.

ATTENTION! The spark plug should be replaced every 60 hours of machine use or annually during a service.

The correct spark plug is Draper stock No.32184.

iv. Make sure you correctly seat the spark plug thread in to the engine before screwing it clockwise in to the head.

v. Tighten the spark plug (6.1) using combination tool, before replacing the H.T. lead (6). The rubber surround of the H.T. lead cap should be tucked inside the plastic housing of the body to make sure of a good connection with the spark plug.

FIG. 8

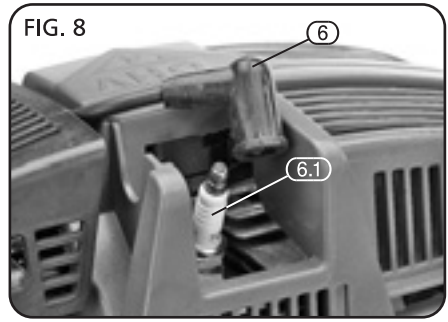

FIG. 9

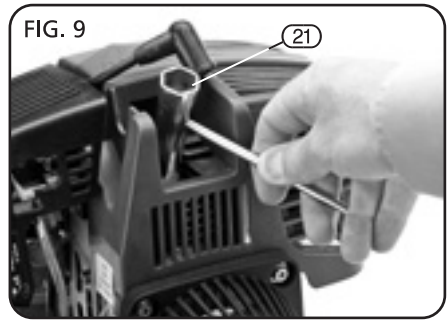

FIG. 10

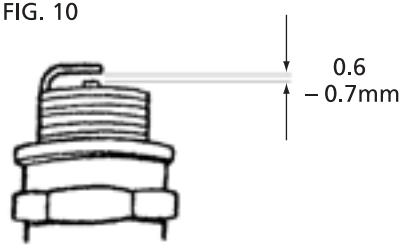

10.2 ENGINE IDLE SPEED ADJUSTMENT (FIG.11):

With the engine running at idle the line spool must not operate.

Adjust as necessary.

i. Run the engine until it is warm.

ii. Turn screw (3.1) anticlockwise to decrease the engine idle speed.

FIG. 11

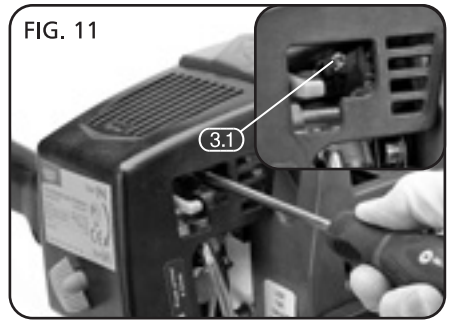

10.3 STORAGE

After each use, clean the machine thoroughly.

Remove the spark plug ignition lead from the back of the spark plug to disable the engine from starting.

Store the machine out of the reach of children and in a locked, dry location.

Remove all residual fuel from the fuel tank before storing. Fuel quality deteriorates over a couple of months causing starting/running problems.

Store the machine in a horizontal position.

Do not stand upright with the engine on the floor.

10.4 REPLACING THE FUEL FILTER (FIG.12):

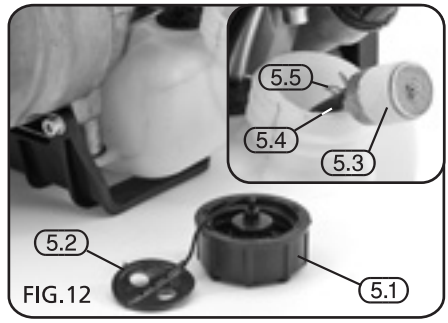

FIG.12

To make sure the supply of fuel remains clean there is a small fuel filter attached to the pick-up tube inside the fuel tank. This must be checked regularly and replaced when clogged.

i. Drain fuel tank completely.

ii. Gently pull the fuel tank cap (5.1) and chain to release the spring (5.2) clip from inside the tank mouth.

iii. Tilt the engine so that the fuel tank opening is the lowest point and shake. This will cause the fuel filter (5.3) to fall in to reach.

iv. Gently pull the filter clear of the tank mouth.

v. Without letting go of the pick-up line (5.4), squeeze the hose clip (5.4) and move it away from the filter.

vi. While still holding the fuel line, pull the clogged filter off and insert the clean filter.

vii. Reposition the hose clip to grip the fuel line on to the filter.

viii. Push the filter back inside the tank.

ix. Squeeze the spring clip (5.2) and push it back inside the mouth of the fuel tank.

10.5 REPLACING THE AIR FILTER (FIG.13):

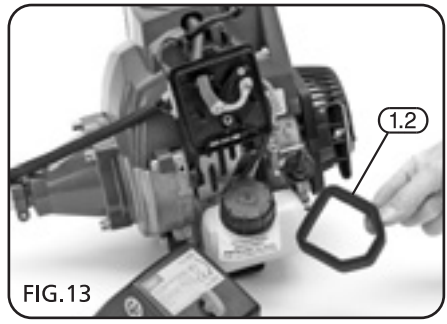

FIG.13

A clogged air filter not only reduces the efficiency of the engine and cutting, but also increases fuel consumption.

Remove the air filter cover (1) by unscrewing knob. Lift off cover, being careful of the choke lever and locating tabs.

Remove the air filter (1.1) and clean in warm soapy water. Allow to dry completely before refitting. Always replace the filter if it is damaged or when dirt cannot be washed out.

11. TROUBLESHOOTING

Problem	Probable cause	Suggested remedy
1. Engine will not start.	Engine stop switch activated.	Slide stop switch back to on position.
	Little or no fuel.	
	Stagnant fuel (fuel has been stored too long).	
	Spark plug electrode fouled or the gap is incorrectly set.	Remove and service/replace spark plug.
	Spark plug H.T. lead not properly connected.	Push H.T. lead on firmly and make sure the engine housing is not preventing a good connection.
	Choke set incorrectly for the starting conditions.	Move the choke to the other setting and try again.
	Air filter clogged.	Clean/replace air filter.
	Engine flooded with fuel (the engine has been over primed).	Remove spark plug and dry the electrode of fuel. Pull start handle 2 or 3 times without the spark plug fitted. Wait a moment before refitting the spark plug and trying again.
	Fuel filter clogged.	Replace fuel filter (in fuel tank).
2. Engine will not restart after refuelling.	No fuel in the lines.	If the engine was run until starved of fuel, repriming may be necessary to purge any air from the fuel supply line.
3. Engine runs roughly.	Choke set incorrectly.	Adjust choke.
	Service due.	Clean/replace air filter and spark plug.
		Drain fuel tank. Refill with new unleaded fuel.

12. DISPOSAL

12.1 DISPOSAL

- At the end of the machine's working life, or when it can no longer be repaired, ensure that it is disposed of according to national regulations.
- Contact your local authority for details of collection schemes in your area.

  In all circumstances:
  - Do not dispose with domestic waste.
  - Do not incinerate.
  - Do not abandon in the environment.
  - When decommissioning (preparing the machine to be scrapped) drain any remaining fuel and oil for separate disposal.

13 EXPLANATION OF SYMBOLS

Single value noise marking. (Maximum declared A-Weighted sound power level in decibels).

Distance between machine and bystanders shall be no less than 15M.

Always wear personal protective equipment, ear defenders, face protection and helmet.

Beware of thrown objects.

Always wear gloves.

Keep away from sources of ignition.

Always wear safety footwear.

Warning.

Read the instruction manual.

Do not use metal filament.

Maximum cutting head rotation speed.

CONTACTS

- ***DRAPER TOOLS LIMITED,***
  Hursley Road, Chandler's Ford,
  Eastleigh, Hampshire. SO53 1YF. U.K.

- **Helpline:** (023) 8049 4344
- **Sales Desk:** (023) 8049 4333
- **Website:** www.drapertools.com
- **E-mail:** sales@drapertools.com
- **Sales Fax:** (023) 8049 4209
- **General Enquiries:** (023) 8026 6355

- **Service/Warranty Repair Agent**
  For aftersales servicing or warranty repairs, please contact the Draper Tools Helpline for details of an agent in your local area.

YOUR DRAPER STOCKIST

KCCH210613