INSTRUCTIONS FOR

115mm Composite Angle Grinder

Stock No.47572 Part No.5228PRO

IMPORTANT: PLEASE READ THESE INSTRUCTIONS CAREFULLY TO ENSURE THE SAFE AND EFFECTIVE USE OF THIS PRODUCT.

CE

GENERAL INFORMATION

Read all these instructions before operating this product and save these instructions.
This manual has been compiled by Draper Tools and is an integrated part of the product with which it is enclosed and should be kept with it for future references.

This manual describes the purpose for which the product has been designed and contains all the necessary information to ensure its correct and safe use. We recommend that this manual is read before any operation or, before performing any kind of adjustment to the product and prior to any maintenance tasks. By following all the general safety instructions contained in this manual, it will ensure both product and operator safety, together with longer life of the product itself.

All photographs and drawings in this manual are supplied by Draper Tools to help illustrate the operation of the product.

Whilst every effort has been made to ensure accuracy of information contained in this manual, the Draper Tools policy of continuous improvement determines the right to make modifications without prior warning.

CONTENTS

Contents/Guarantee 1
Specification 2
Air Supply 3
General Safety Instructions 4
Additional Safety Instructions 5-6
Getting to Know Your Angle Grinder 7
Assembly 8-10
Operation and Use 11-12
Maintenance 13
Troubleshooting 13
Disposal 14
Explanation of pictograms/symbols 14
Declaration ..... Enclosed

GUARANTEE

Draper air tools have been carefully tested and inspected before shipment and are guaranteed to be free from defective materials and workmanship for 6 months from the date of purchase except where tools are hired out when the guarantee period is ninety days from the date of purchase.

Should the machine develop any fault, please return the complete tool to your nearest authorised warranty repair agent or contact Draper Tools Limited, Chandler's Ford, Eastleigh, Hampshire, SO53 1YF. England. Telephone Sales Desk: (023) 8049 4333 or Product Helpline (023) 8049 4344.

A proof of purchase must be provided with the tool.

If, upon inspection it is found that the fault occurring is due to defective materials or workmanship, repairs will be carried out free of charge. This guarantee does not apply to normal wear and tear, nor does it cover any damage caused by misuse, careless or unsafe handling, alterations, accident, or repairs attempted or made by any persons other than the authorised Draper warranty repair agent.

Note: If the tool is found not to be within the terms of warranty, repairs and carriage charges will be quoted and made accordingly.
This guarantee applies in lieu of any other guarantee expressed or implied and variation of its terms are not authorised.

Your Draper guarantee is not effective unless you can produce upon request a dated receipt or invoice to verify your proof of purchase within the guarantee period.

Please note that this guarantee is an additional benefit and does not affect your statutory rights.

SPECIFICATION

The Draper Tools policy of continuous improvement determines the right to change specification without notice.

Stock no.	47572
Part no.	5228PRO
Disc diameter	115mm
Bore Ø	22.2mm
Spindle thread	M14
Maximum operating air pressure	90psi (6.2BAR)
Average air consumption	4cfm (113L/min)
Revolutions per minute (no load)	12,000r/min
Minimum air line size	⅜" ID
Air inlet	¼" BSP
Sound pressure level†	89.0dB(A)
Sound power level††	91.0dB(A)
Vibration level	<2.5m/s²
Weight	2kgs

WARNING: WEAR APPROVED SAFETY GLASSES AND EAR DEFENDERS

† Continuous A-Weighted Sound Pressure Level at the workstation in accordance to prEN ISO 15744:1999 and declared according to EN ISO 4871.

†† A-Weighted Sound Power Level in accordance to prEN ISO 15744:1999 and declared according to EN ISO 4871.

FAILURE TO FOLLOW THESE INSTRUCTIONS WILL LEAD TO PREMATURE MALFUNCTION OF THE EQUIPMENT WHICH IS NOT COVERED BY THE GUARANTEE.

- **HYDRAULIC FLUID SPECIFICATION:**

Hydraulic fluid viscosity refers to it's properties to flow and how it reacts with heat. A low viscosity is thinner than a high viscosity.

Hydraulic fluid becomes thinner as it heats so choosing the right viscosity is essential. If the viscosity is too low it may provide insufficient lubrication when heated. Equally if it is too high the fluid may provide excessive resistance to move through the lines when cold.

The ISO (International Standards Organisation) viscosity grading system measures the kinematic viscosity in centistokes (cSt) at 40° which is todays accepted standard. The SAE (Society of Automotive Engineers) viscosity grade value is based on a scale.

This equipment is suited to an ISO grade 22-32 (SAE grade 5W-15W) hydraulic fluid or monograde oil.

The fluid must be constantly supplied to the equipment during use to ensure complete lubrication and optimum performance is achieved. It also acts as a rust inhibitor when the equipment is not in use. Most of the major brand petroleum companies produce a suitable lubricant to the above specifications.

This air tool operates at a maximum pressure of 90psi and must be controlled via a combination pressure regulator, in-line lubricator and moisture filter such as the Draper range (see your local Draper stockist) which with proper maintenance will ensure a constant supply of dry air and lubricating oil at all times (see illustration below). Always check machine operating pressure before use.

WATER IN THE COMPRESSOR TANK WILL CAUSE SERIOUS CORROSION TO YOUR AIR TOOLS AND SHOULD BE DRAINED DAILY TO AVOID EXCESSIVE WATER IN YOUR AIR SUPPLY. DIRTY WET AIR RAPIDLY SHORTENS THE LIFE OF YOUR AIR TOOL.

If you are using an air tool on a hose over 25ft. long it is advisable to increase the bore of the hose to the next larger size available i.e.. ¼" increases 3⁄8". This will ensure adequate pressure and volume of air to power the machine.

RECOMMENDED AIR SUPPLY SET UP

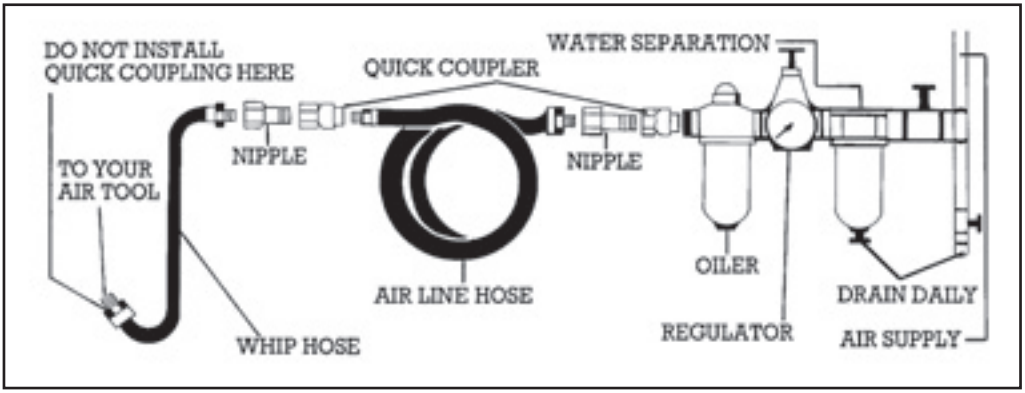

After each use and before prolonged storage lubricate the equipment with approximately 1.5ml of oil directly down the air inlet.

GENERAL SAFETY INSTRUCTIONS

IMPORTANT:

Draper Tools Limited recommends that this machine should not be modified or used for any application other than that for which it was designed. If you are unsure of its relative applications do not hesitate to contact us in writing and we will advise you.

- Power tools shall not be used in potentially explosive atmospheres unless specifically designed for that purpose.
- Unexpected tool movement due to reaction forces or breakage of inserted tool may cause injuries.
- Power tools shall be isolated from the energy source before changing or adjusting the inserted tool.
- **WARNING:**
  - There is a risk of loose clothing, hair, etc. being caught in the rotating spindle of the power assembly tool.
  - In the event of an air line failing the whipping compressed air hose poses a risk of injury or damage to property. Isolate the air hose from the supply quickly and safely.
  - There is a risk of being injured by whipping air hoses.
- Adopt a suitable posture to counteract normal or unexpected movement of the power tool due to reaction forces;
- Release the start and stop device in the case of an interruption of the energy supply;
- Only lubricants recommended by the manufacturer shall be used;
- Release pressure when not in use. Disconnect from air line;
- Do not modify this grinder in any way.
- Do not carry or move the tool by the air line.
- In the event of hydraulic fluid/monograde oil contact or spillage refer to the manufacturer's datasheet. As a general guide refer below.

HYDRAULIC FLUID DATA SHEET:

Always wear gloves and goggles when dealing with hydraulic fluid.

Hydraulic fluid composition is achieved when highly refining mineral oil by means of a solvent.

As a substance is not considered to be hazardous to health under normal conditions of use.

First Aid recommendations

- In case of ingestion:

  Wash out mouth with clean water and seek medical advice.

  Do not induce vomiting.
- In case of contact with eyes:

  Thoroughly flush eyes with clean water for 5 to 10 minutes and seek medical advice.
- In case of contact with skin:

  Wash area with soap and water. Remove effected clothing and wash. If irritation persists, seek medical advice.
- Other:

  Seek medical advice immediately.

Hydraulic fluid is a combustible and in the event of fire should be extinguished using a foam or dry powder fire extinguisher. Do not use water.

In the event of accidental release into the environment measures to prevent spread must be adhered. Do not contaminate rivers, water ways or drains. Spillage should be contained with sand, grit or other appropriate barriers.

Warn bystanders as spillage may present a slip hazard.

Hydraulic fluid is not considered biodegradable and may in fact bioaccumulate.

IMPORTANT NOTE:

Residual Risk. Although the safety instructions and operating manuals for our tools contain extensive instructions on safe working with power tools, every power tool involves a certain residual risk which can not be completely excluded by safety mechanisms. Power tools must therefore always be operated with caution!

ADDITIONAL SAFETY INSTRUCTIONS

- Release the start and stop device in the case of an interruption of the energy supply.
- Disconnect the grinder from the energy supply before changing abrasive product and servicing.
- Check that speed marked on the wheel is equal to or greater than the rated speed of the grinder;
- Check regularly that the speed of the grinder is not higher than that marked on it. These speed checks shall be carried out without the abrasive product mounted and in accordance with the instructions given by the manufacturer.
- Ensure that the wheel dimensions are compatible with the grinder; ensure that the abrasive product dimensions are compatible with the grinder and that the abrasive product fits the spindle.
- Check that the spindle and spindle threads are not damaged or worn.
- Abrasive wheels shall be stored and handled with care in accordance with manufacturer's instructions;
- Inspect the grinding wheel before use, do not use chipped, cracked or otherwise defective products;
- Examine the abrasive product thoroughly before re-use, if the powertool, fitted with an abrasive product, has been dropped.
- Ensure that mounted wheels and points are fitted in accordance with the manufacturer's instructions;
- Ensure that blotters are used when they are provided with the bonded abrasive product and when they are required;
- Prevent the spindle end from touching the bottom of the hole of cups, cones or plugs with threaded holes, intended to be mounted on machine spindles.
- Ensure that the abrasive product is correctly mounted and tightened before use and run the tool at no-load for 30 s in a safe position, stop immediately if there is considerable vibration or if other defects are detected. If this condition occurs, check the machine to determine the cause;
- If a guard is supplied with the tool never use the tool without such a guard. Ensure that the guard is in place, is in good condition and is correctly mounted and that it shall be regularly inspected.
- Do not use separate reducing bushings or adapters to adapt large hole abrasive wheels; ensure safe clamping of the abrasive product to the power tool.
- For tools intended to be fitted with threaded hole wheel, ensure that the thread in the wheel is long enough to accept the spindle length; ensure that the thread type and size of the abrasive product exactly matches the thread type and size of the spindle.
- Check that the work piece is properly supported; when cutting off the work piece shall be so supported that the slot is kept at constant or increasing width during the whole operation. If the abrasive product gets jammed in a cut slot, shut off the grinder and ease the wheel free. Check that the wheel is still correctly secured and not damaged before continuing the operation.
- Do not use cutting wheel for side grinding;
- Ensure that sparks resulting from use do not create a hazard e.g. do not hit persons, to ignite flammable substances;
- Ensure that ventilation openings are kept clear when working in dusty conditions. If it should become necessary to clear dust, first disconnect the tool from the mains supply (use non metallic objects) and avoid damaging internal parts;
- Always use eye and ear protection;
- Personal protective equipment such as dust mask, gloves, helmet and apron should be worn;
- The operator shall pay attention that no bystanders are in the vicinity.
- The wheel continues to rotate after the tool is switched off.
- Check that all connections, such as for hoses are in good condition and are properly installed.
- **Warning:** Prior to mounting an abrasive wheel ensure the expiry date has not exceeded rendering it potentially hazardous.

1. **Warning:** Working in certain materials creates emissions of dust and fumes, causing a potentially explosive environment.
2. **Warning.** When using tools, basic safety precautions, including the following should always be followed to reduce the risk of fire, electric shock and personal injury.
3. **Use the right tool.** Do not force small tools or attachments to do the job of a heavy duty tool. Do not use tools for purposes not intended; for example, do not use circular saws to cut tree limbs or logs.
4. **Secure work.** Use clamps of a vice to hold the work. It is safer than using your hands and it frees both hands to operate the tool.
5. **Stay alert.** Watch what you are doing. Use common sense. Do not operate tool when you are tired.
6. **Wear proper clothing.** Do not wear loose clothing, neckties or jewellery (ring, wristwatches etc.) to catch in moving parts. NONSLIP footwear is recommended. Wear protective covering to contain long hair. Roll long sleeves above the elbow.
7. **Use safety goggles (Head protection).** Wear goggles approved to the relevant standards at all times. Normal spectacles only have impact resistant lenses, they are NOT safety glasses. Also, use face or dust mask if application is dusty and ear protectors during all operations.
8. **Sound levels.** Some types of machines may have high sound levels when working. In such cases ear protection must be worn.
9. **Vibration levels.** Hand held power tools produce different vibration levels. You should always refer to the specifications and the relevant Health and Safety guidelines.
10. **Dust extraction. Warning:** working in certain materials creates emission of dust and fumes. If your tool is fitted with a dust extraction facility, always ensure that it is connected and being used with a dust extractor. Vacuum cleaners can be used if suitable for the material being extracted.
11. **Check damaged parts.** Before further use of the tool, a guard or other part that is damaged should be carefully checked to determine that it will operate properly and perform its intended function. Check for alignment of moving parts, free running of moving parts, breakage of parts, mounting and any other conditions that may affect its operation. A guard or other part that is damaged should be properly repaired or replaced by an authorised service centre unless otherwise indicated in

this instruction manual. Have defective switches replaced by an authorised service centre. Do not use the tool if the switch does not turn it on and off.

12. **Have your tool repaired by a qualified person.** This electric tool is in accordance with the relevant safety requirements. Repairs should only be carried out by qualified persons using original spare parts, otherwise this may result in considerable danger to the user.

SAFETY RECOMMENDATIONS FOR THE CORRECT USE OF ABRASIVE PRODUCTS

a. **General.** Bonded abrasive products are breakable and shall therefore be handled with utmost care. The use of damaged or improperly mounted or used abrasive products is dangerous and can cause serious injuries.

b. **Delivery, handling and storage.** Abrasive products shall be handled and transported with care. Abrasive products shall be stored in such a manner that they are not subjected to mechanical damaged and harmful environmental influences.

c. **Selection of the abrasive product.** Information on the label or the abrasive product as well as restrictions of use, safety indications or any other instructions shall be followed. In case of doubt concerning the selection of abrasive products, the user shall request information from the manufacturer or supplier.

d. **Visual inspection and ring test.** Abrasive products shall be subjected to a visual inspection as received before mounting. In addition, a ring test shall be executed for vitrified wheels with D>80mm. Damaged abrasive products shall be destroyed.

e. **Mounting before starting and information for grinding.** The mounting of abrasive products shall be carried out according to the instructions provided by both the wheel and the machine manufacturer. Mounting of abrasive products shall be carried out by a qualified trained person. Each time after mounting, the wheel shall be test run for a reasonable time - the specified maximum operating speed of the wheel shall not be exceeded.

f. **Further information.** The following instructions shall be observed, supplementary to the information contained in the instruction for use of the grinding machine:
   - Observance of the user's information from the grinding machine manufacturer.
   - Safety devices shall be mounting to the machine and shall be secured.
   - No grinding operations without protection by safety devices.
   - Use of personal protective equipment according to the type of machine and type of application, e.g. eye and face protection, ear protection, respiratory protective devices, protective footwear, protective gloves and other protective clothing.
   - Only grinding operations for which the abrasive product is suitable shall be carried out (taking into account restrictions of use, safety indications or other information).
   - Jamming of the hand-held grinding machine shall be prevented. In the case of cutting-off with hand-held grinding machines, the abrasive product shall be placed in the cutting gap in a straight position.
   - Before placing the hand-held grinding machine on the workbench or on the floor it shall be turned off and it shall be ensured that the abrasive product has stopped.

SAFETY RECOMMENDATIONS FOR THE CORRECT USE OF SUPERABRASIVES.

a. **General.** Superabrasives are breakable and shall therefore be handled with utmost care! The use of damaged or improperly mounted or used superabrasives is dangerous and can cause serious injuries.

b. **Delivery, handling and storage.** Superabrasives shall be handled and transported with care. Superabrasives shall be stored in such a manner that they are not subjected to mechanical damages and harmful environmental influences.

c. **Selection of superabrasives.** Information on the label or the superabrasive as well as restrictions of use, safety indications or any other instruction shall be followed. In case of doubt concerning the selection of superabrasives, the user shall request information from the manufacturer or supplier.

d. **Visual inspection and ring test.** Superabrasives shall be subjected to a visual inspection as received before mounting. In a addition, a ring test shall be executed for superabrasives with vitrified core and abrasive section and D>80mm. Damaged superabrasives shall not be used.

e. **Mounting, before starting and information for grinding.** The mounting of superabrasive shall be carried out according to the instructions provided by both, the superabrasive and the machine manufacturer. Special attention shall be drawn to the fact that mounting of superabrasives is to be carried out by a qualified trained person. Each time after mounting, the superabrasive shall be test run for a reasonable time - the specified maximum operating speed of the superabrasive shall not be exceeded.

f. **Further information.** The following instructions shall be observed, supplementary to the information of the grinding machine:
   - Observance of the user's information of grinding machine manufacturer.
   - Before starting, safety devices shall be mounted to the machine.
   - No grinding operations without protection by safety devices.
   - Use of personal protective equipment according to the type of machine and type of application, e.g. eye and face protection, ear protection, respiratory protection devices, protective footwear, protective gloves and other protective clothing.
   - Only grinding operations for which the superabrasive is suitable shall be carried out (taking into account restrictions of use, safety indications or other information).
   - In the case of cutting-off with hand-held grinding machines, the superabrasive shall be placed in the cutting gap in a straight position. Jamming of the hand-held grinding machine shall be prevented.
   - Before placing the hand-held grinding machine on the workbench or on the floor it shall be turned off and it shall be ensured that the abrasive product has stopped.

GETTING TO KNOW YOUR ANGLE GRINDER

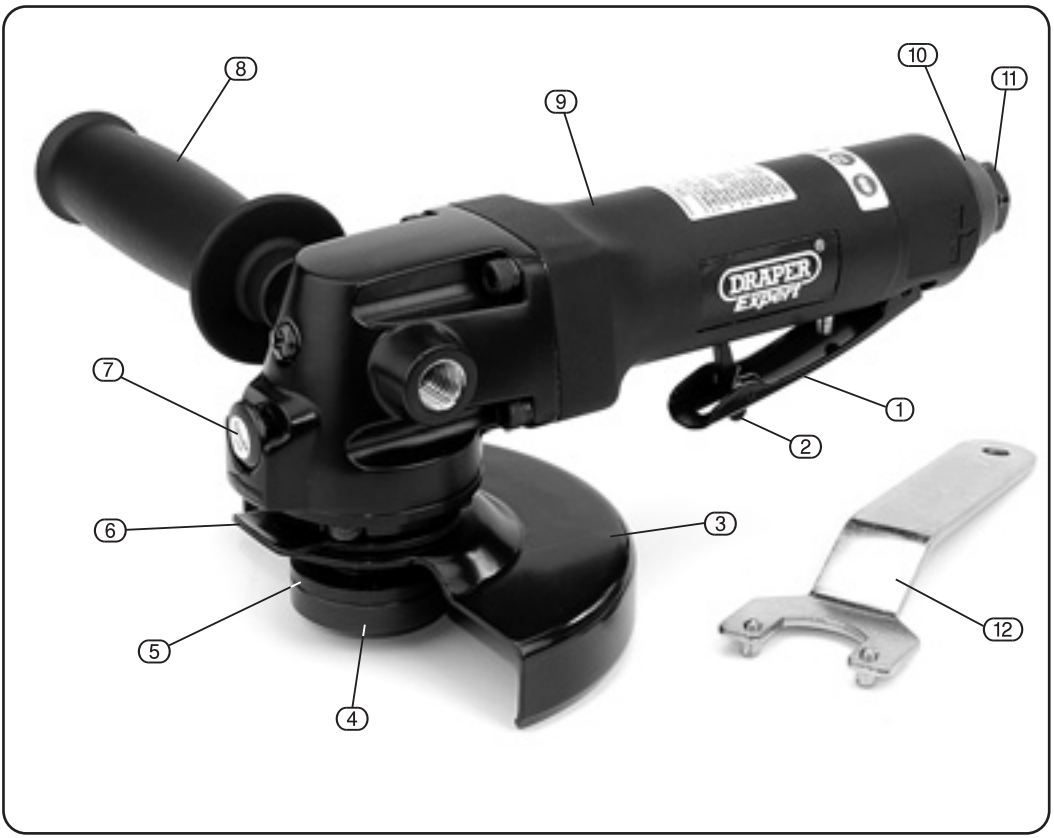

1. Trigger.
2. Trigger release lever.
3. Guard.
4. Locking flange.
5. Inner flange.
6. Guard position quick release.
7. Spindle lock.
8. Auxilary handle.
9. Composite body.
10. Exhaust.
11. ¼" BSP (female) air inlet.
12. Pin spanner.

- **SCOPE:** This copressed air grinder is intended to be used by one operator and is intended for grinding and cutting off, with bonded, coated or superabrasives for use on all kinds of materials. Any other use is forbidden.
- **UNPACKING:** After removing the packing material, make sure the product is in perfect condition and that there are no visible damaged parts. If in doubt, do not use the product and contact the dealer from whom it was purchased.

  The packaging materials (plastic bags, polystyrene, etc.), must be disposed of in an appropriate refuse collection container. These materials must not be left within the reach of children as they are potential sources of danger.

ASSEMBLY

- **Note:** Disconnect from the air supply before carrying out adjustment, sevicing or maintenance.

- **WHIP HOSE (Fig.1.):**
  To connect the angle grinder to an air line a ¼" BSP male thread whip hose† will be required. Wind a length of PTFE tape†† around the thread before securing the hose in place. The connection must be firm for an airtight union.
  †Draper Stock No.54438
  ††Draper Stock No.63389

FIG.1

- **AUXILIARY HANDLE (Fig.2.):**
  For reasons of safety, when working with this type of power tool, the operator must always use the auxiliary handle (A). Screw the handle clockwise into one of two threaded apertures best suited to the application and user comfort.
  Ensure the handle is tight and the guard adjusted to suit the new set-up.

FIG.2

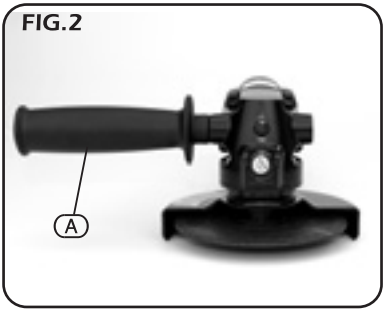

- **GUARD (Fig.3.):**
  The guard comes pre-assembled only requiring adjustment to suit the application.
  Lift tab (B) while rotating guard (C). Ensure the guard correctly locates with tab (B) clicking down into position.

- **WARNING:**
  Never attempt to operate (cutting off/grinding process) this machine without the guard securely fitted and correctly positioned†.
  † With the exception of wire cup brushes etc. Which negate the effectiveness of the guard. Safety goggles must be worn in addition to using the guard.

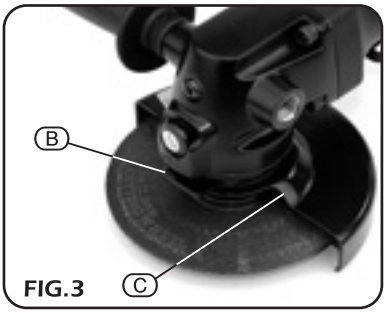

FIG.3

- **FITTING/REPLACING ACCESSORIES (NOT SUPPLIED) (Fig.4 & 5.):**
- **WARNING: Selection of the correct assessory, suitable for the intended application is vital. Seek guidance if uncertain of selection. Prior to mounting an abrasive wheel ensure the expiry date has not exceeded rendering it potentially hazardous.**

- **VISUAL INSPECTION:**

  Prior to fitting, abrasive/superabrasive wheels shall be subject to a visual inspection.

  Damaged abrasives shall be destroyed.

- **WARNING:**

  The rated (no-load) revolutions per minute of the tool must not exceed the speed capacity of the preposed accessory. Please refer to the accessory manufacturer's instructions for information.

  Press and hold the spindle lock button (D) loosen the locking flange (E) anti-clockwise using the pin spanner supplied. The spindle (F) may rotate slightly before the spindle lock fully engages. Remove the locking flange only. Clean the flanges and spindle prior to fitting any accessories. If the rear flange (G) is removed for cleaning ensure it is correctly refitted with the large step facing the machine. This steps the abrasive out away from the guard. When fitting the appropriate accessory refer to (Fig.5) for specific details on the locking flange fitment specifically the orientation to ensure it correctly grips the abrasive.

  Securely tighten the locking flange clockwise using the pin spanner while holding down the spindle lock (D).

- **WARNING:**

  Never press the spindle lock button while the spindle is in motion.

FIG.4

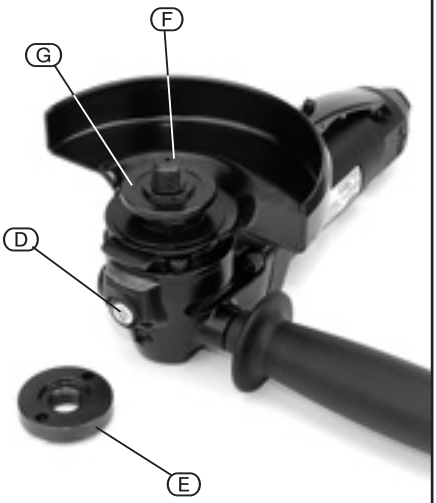

- **INSPECTION:**
  Each time after mounting the abrasive/superabrasive wheel shall be test run for a reasonable time.

  The specific maximum operating speed of the wheel shall not be exceeded.

- **NOTE:** When using wire cup brushes the flanges are not required due to the design of the brushes. When fitted, ensure the accessory is correct but more importantly fully secure on the spindle.

FIG.5

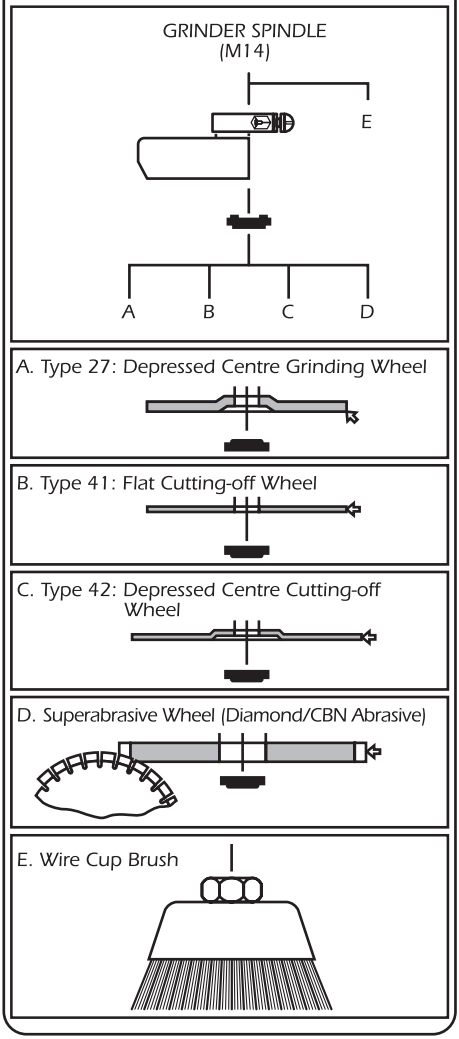

- **TRIGGER (Figs.6.):**
  Due to the risk of unintentional starting the angle grinder requires two seperate and dissimilar actions to power the tool.
  Pivot the trigger release lever (H) forward. This allows the trigger (I) to be pulled in towards the body of the grinder.
- **WARNING:**
  Do not set the machine down until the spindle has completely stopped.

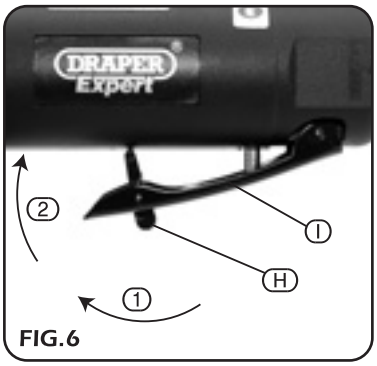

FIG.6

NOTE:
During use, keep clothing out of the line of any sparks formed. Sparks from metal grinding/cutting can set fire to many types of clothing after a short delay. The risk is less if your clothing is made of wool, or flame retardant treated cotton.

- **DUST:**
  A correct fitted dust mask, suitable for the activity and in accordance to the relevant standard, must be worn.

- **GRINDING (Fig.7.):**
  When performing grinding operations maintain an angle of approximately 30° between the work surface and the disc face. Only use abrasives specifically designed for this task.

FIG.7

- **CUTTING (Fig.8.):**
  When performing cutting-off operations do not incline the machine as this can lead to the abrasive wheel becoming jammed, damaged or excesively and abnormally worn.
  Only use abrasives specifically designed for this task.

FIG.8

- **WARNING:**
  As the cutting-off/grinding wheel wears during use, its diameter reduces. This reduces the peripheral speed and the cutting efficiency. The results in increased load on the grinding machine which if continued will damage the motor. Ensure that the diameter of the wheel is within 25% of its original size.

- **IMPORTANT:**
  Excessive pressure on the machine does not result in a higher abrasive efficiency. Excessive pressure increases wear and tear on the accessory and will damage the angle grinder, invalidating the guarantee. In extreme cases this can cause the wheel to shatter and cause serious injury.

MAINTENANCE

Regular maintenance will help keep the grinder in a safe working condition.

DAILY:

- Before connection to the air supply drain the compressor reservoir, air lines and water trap of condensate. Check the level of the in line lubricant and adjust as necessary. Adjust the air line level correct for the tool.
- Inspect the abrasive and guard.
- Lubricate the tool with approximately 1.5ml of oil directly down the air inlet.

EVERY 24HR RUNNING TIME:

- With a general purpose grease, top up the level of lubricant in the front gear housing. Remove the cross slot screw, located above the spindle lock button, to gain access to the gear housing. Do not overtighten the screw when refitting.

EVERY 48HR RUNNING TIME:

- Inspect the spindles, threads and clamping devices in respect of wear and tolerances for location of abrasive product.

TROUBLESHOOTING

PROBLEM	POSSIBLE CAUSE	REQUIRED ACTION
▪ Tool will not operate. Air flows slightly from exhaust. Spindle turns freely.	▪ Motor or throttle seized with dirt.	▪ Check for dirt in air inlet. ▪ Pour air tool lubricating oil into air inlet. ▪ Operate trigger in short bursts. ▪ Disconnect air line supply, then turn spindle by hand. Reconnect air supply. ▪ If motor fails to turn return to service centre.
▪ Tool runs slowly. Air flows freely from exhaust.	▪ Rotor vane seized.	▪ Pour air tool lubricating oil into air inlet. ▪ Operate tool in short bursts. ▪ Tap motor housing gently with plastic mallet. ▪ If still not functional, return to service centre.
▪ Spindle seized.	▪ Motor vane broken.	▪ Return to service centre.
▪ Tool will not shut off.	▪ 'O' rings throttle valve dislodged from seat inlet valve.	▪ Replace 'O' ring or return to service centre.

DISPOSAL

At the end of the machine's working life, or when it can no longer be repaired, ensure that it is disposed of according to national regulations. Contact your local authority for details of collection schemes in your area.

In all circumstances:

- Do not dispose of power tools with domestic waste.
- Do not incinerate.
- Do not abandon in the environment.

During decommissioning of the equipment certain hazards should be understood and avoided:

- Dealing with hydraulic fluid - refer to the data sheet section for details.
- Only with the line pressure released shall the equipment be disassembled. Goggles should be worn.

EXPLANATION OF SYMBOLS/PICTOGRAMS

The operator's instruction must be read before work starts.

Direction of rotation.

Wear safety glasses.

Wear ear defenders.

CONTACTS

- **DRAPER TOOLS LIMITED,**
  Hursley Road, Chandler's Ford,
  Eastleigh, Hampshire. SO53 1YF. U.K.

- **Helpline:** (023) 8049 4344
- **Sales Desk:** (023) 8049 4333
- **Internet:** www.draper.co.uk
- **E-mail:** sales@drapertools.com
- **Sales Fax:** (023) 8049 4209
- **General Enquiries:** (023) 8026 6355

- **Service/Warranty Repair Agent**
  For aftersales servicing or warranty repairs, please contact the Draper Tools Helpline for details of an agent in your local area.

YOUR DRAPER STOCKIST

OAMC100908

©Published by Draper Tools Limited.
No part of this publication may be reproduced, stored in a retrieval system or transmitted in any form or by any means, electronic, mechanical photocopying, recording or otherwise without prior permission in writing from Draper Tools Ltd.