DRAPER®
THE TOOL COMPANY

PARTS LISTING

MACHINE: DUAL ACTION AIR SANDER
MACHINE STOCK No.56092.
MACHINE PART No.4209A.

08/98

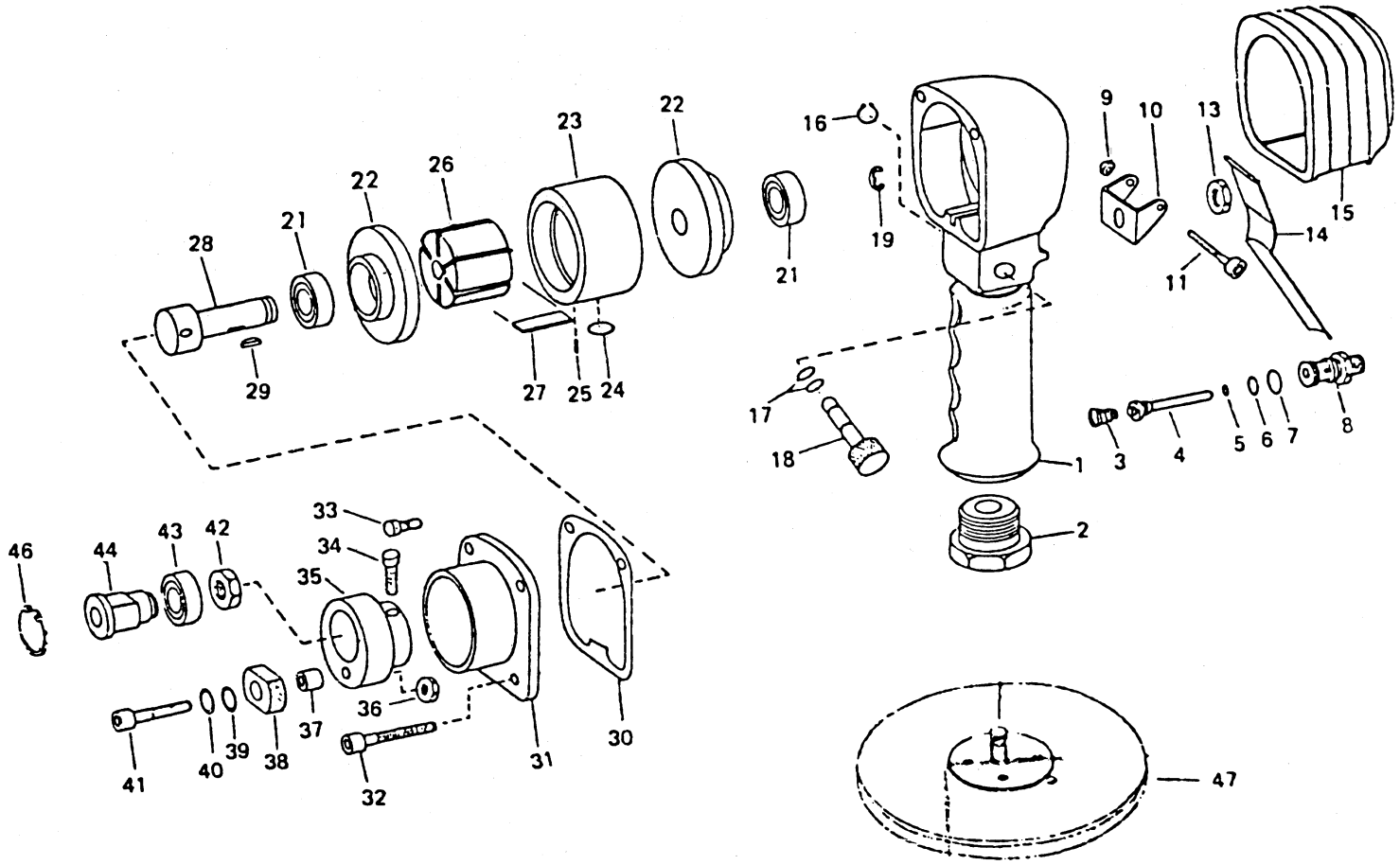

KEY No.	PART No.	STOCK No.	DESCRIPTION
1	Y4209A-1	20379	Motor housing with grip
2	Y4209A-2	20380	Hose adapter
3	Y4209A-3	20381	Throttle valve spring
4	Y4209A-4	56111	Throttle valve shaft
5	Y4209A-5	20382	O-ring
6	Y4209A-6	20383	O-ring
7	Y4209A-7	20384	O-ring
8	Y4209A-8	20385	Valve body
9	Y4209A-9	25649	Hex. nut
10	Y4209A-10	20386	Bracket
11	Y4209A-11	20387	Hinge screw
13	Y4209A-13	20389	Hex. nut
14	Y4209A-14	20390	Throttle lever
15	Y4209A-15	20391	Housing cover
16	Y4209A-16	20392	Retaining ring
17	Y4209A-17	20393	O-ring
18	Y4209A-18	20394	Regulator valve
19	Y4209A-19	20395	Retaining ring
21	Y4209A-21	20397	Ball bearing
22	Y4209A-22	20398	End plate
23	Y4209A-23	25650	Cylinder
24	Y4209A-24	20399	O-ring

KEY No.	PART No.	STOCK No.	DESCRIPTION
25	Y4209A-25	20400	Cylinder pin
26	Y4209A-26	20401	Rotor
27	Y4209A-27	20402	Rotor blade
28	Y4209A-28	25651	Rotor shaft
29	Y4209A-29	20403	Key
30	Y4209A-30	20404	Gasket
31	Y4209A-31	25652	Drive housing
32	Y4209A-32	20405	Cap screw
33	Y4209A-33	20406	Cap screw
34	Y4209A-34	20407	Cap screw
35	Y4209A-35	20408	Orbital hub
36	Y4209A-36	20409	Hex. nut
37	Y4209A-37	20410	Spacer
38	Y4209A-38	20411	Spindle lock
39	Y4209A-39	20412	Spring washer
40	Y4209A-40	25653	Flat washer
41	Y4209A-41	20413	Cap screw
42	Y4209A-42	56113	Hex. nut
43	Y4209A-43	20415	Ball bearing
44	Y4209A-44	20416	Drive spindle
46	Y4209A-46	20417	Retaining ring
47	Y4209A-47	20418	Pad

POWER DIVISION HELP LINE: 01703 494344

DRAPER TOOLS LIMITED, HURSLEY ROAD, CHANDLER'S FORD, EASTLEIGH, HAMPSHIRE. SO53 1YF. ENGLAND.