DRAPER®

INSTRUCTIONS FOR

1134kg & 1814kg 12V Recovery Winch

Stock Nos.24441 Part Nos.RW/12V-1134KGS
24443 RW/12V-1814KGS

IMPORTANT: PLEASE READ THESE INSTRUCTIONS CAREFULLY TO ENSURE THE SAFE AND EFFECTIVE USE OF THIS PRODUCT.

CE

GENERAL INFORMATION

These instructions accompanying the product are the original instructions. This document is part of the product, keep it for the life of the product passing it on to any subsequent holder of the product. Read all these instructions before assembling, operating or maintaining this product.

This manual has been compiled by Draper Tools describing the purpose for which the product has been designed, and contains all the necessary information to ensure its correct and safe use. By following all the general safety instructions contained in this manual, it will ensure both product and operator safety, together with longer life of the product itself.

All photographs and drawings in this manual are supplied by Draper Tools to help illustrate the operation of the product.

Whilst every effort has been made to ensure the accuracy of information contained in this manual, the Draper Tools policy of continuous improvement determines the right to make modifications without prior warning.

1. TITLE PAGE

1.1 INTRODUCTION:

USER MANUAL FOR:

1134kg & 1814kg 12V RECOVERY WINCH

Stock nos. 24441, 24443
Part nos. RW/12V-1134KGS, RW/12V-1814KGS

1.2 REVISIONS:

Date first published July 2012

As our user manuals are continually updated, users should make sure that they use the very latest version.

Downloads are available from: http://www.drapertools.com/b2c/b2cmanuals.pgm

DRAPER TOOLS LIMITED
HURSLEY ROAD
CHANDLER'S FORD
EASTLEIGH
HAMPSHIRE
SO53 1YFUK

WEBSITE: www.draper.co.uk
PRODUCT HELPLINE: +44 (0) 23 8049 4344
GENERAL FAX: +44 (0) 23 8026 0784

1.3 UNDERSTANDING THIS MANUALS SAFETY CONTENT:

WARNING! Information that draws attention to the risk of injury or death.

CAUTION! Information that draws attention to the risk of damage to the product or surroundings.

1.4 COPYRIGHT © NOTICE:

Copyright © Draper Tools Limited.

Permission is granted to reproduce this publication for personal & educational use only. Commercial copying, redistribution, hiring or lending is prohibited.

No part of this publication may be stored in a retrieval system or transmitted in any other form or means without written permission from Draper Tools Limited.

In all cases this copyright notice must remain intact.

2. CONTENTS

2.1 CONTENTS

PAGE CONTENT ***PAGE***

1 TITLE PAGE
- 1.1 INTRODUCTION 2
- 1.2 REVISION HISTORY 2
- 1.3 UNDERSTANDING THIS MANUAL 2
- 1.4 COPYRIGHT NOTICE 2

2 CONTENTS
- 2.1 CONTENTS 3

3 GUARANTEE
- 3.1 GUARANTEE 4

4 INTRODUCTION
- 4.1 SCOPE 5
- 4.2 SPECIFICATION 5
- 4.3 HANDLING & STORAGE 5

5 HEALTH & SAFETY INFORMATION
- 5.1 GENERAL SAFETY INSTRUCTIONS 6
- 5.2 GENERAL WARNINGS 6

6 TECHNICAL DESCRIPTION
- 6.1 IDENTIFICATION 7

7 UNPACKING & CHECKING
- 7.1 PACKAGING 8
- 7.2 WHAT'S IN THE BOX 8

8 PREPARING THE WINCH
- 8.1 WINCH INSTALLATION 9
- 8.2 MINIMUM ELECTRICAL REQUIERMENTS 9
- 8.3 INSTALLATION 10
- 8.4 SWITCH BOX INSTALLATION 11
- 8.5 WIRING INSTALLATION 11
- 8.6 WIRE CABLE 12

9 SETTING THE WINCH
- 9.1 PREPARING THE WINCH 13
- 9.2 WINCHING 14

10 MAINTENANCE
- 10.1 CHECK BEFORE EACH USE 15
- 10.2 LUBRICATION 15

11 TROUBLESHOOTING 16

12 EXPLANATION OF SYMBOLS
- 12.1 EXPLANATION OF SYMBOLS 17

13 DISPOSAL
- 13.1 DISPOSAL 18

DECLARATION OF CONFORMITY ..... ENCLOSED

3. GUARANTEE

3.1 GUARANTEE

Draper tools have been carefully tested and inspected before shipment and are guaranteed to be free from defective materials and workmanship.

Should the tool develop a fault, please return the complete tool to your nearest distributor or contact Draper Tools Limited, Chandler's Ford, Eastleigh, Hampshire, SO53 1YF. England. Telephone: (023) 8026 6355.

A proof of purchase must be provided with the tool.

If upon inspection it is found that the fault occurring is due to defective materials or workmanship, repairs will be carried out free of charge. This guarantee period covering parts/labour is 12 months from the date of purchase. This guarantee does not apply to normal wear and tear, nor does it cover any damage caused by misuse, careless or unsafe handling, alterations, accidents, or repairs attempted or made by any personnel other than the authorised Draper warranty repair agent.

Note: If the tool is found not to be within the Terms of Warranty, repair and carriage charges will be quoted and made accordingly.

This guarantee applies in lieu of any other guarantee expressed or implied and variations of its terms are not authorised.

Your Draper guarantee is not effective unless you can produce upon request a dated receipt or invoice to verify your proof of purchase within the guarantee period.

Please note that this guarantee is an additional benefit and does not affect your statutory rights.

Draper Tools Limited.

4. INTRODUCTION

4.1 SCOPE

This winch is for pulling not lifting.

4.2 SPECIFICATION

Stock No.	24441	24443
Part No.	RW/12V-1134KGS	RW/12V-1814KGS
Rated voltage	12V DC	12V DC
Motor	0.7kw/0.9hp (12V)	1.2kw/1.4hp (12V)
Capacity:		
Single cable	1134kg	1814kg
Cable length	14M	14M
Cable diameter	5.0mm	5.5mm
Weight	10.2kg	11.7kg

4.3 HANDLING & STORAGE

Take care when handling and lifting. Do not drop this winch.
Store in a dry location out of the reach of children.

5. HEALTH & SAFETY INFORMATION

5.1 GENERAL SAFETY INSTRUCTIONS

WARNING: Before the use of this or any other pulling equipment all persons who install, operate or maintain this equipment should read and fully understand this manual. If this winch or any other pulling equipment presents the possibility of personal injury or damage to property it should not be used.

- Ensure that the winch is fully inspected before every use.
- Winches are only to be operated by a trained operator.
- Do not exceed the maximum pulling capability of the winch.
- Ensure that the fixing point is substantial enough to take the load which is intended to be pulled.
- Never allow the winch housing to bear any support when pulling a load.
- Ensure the cables are not twisted or obstructed to prevent free running of the cable.
- Never use the load cable as a sling.
- Never wrap the cable around the load which is to be pulled.
- Do not pull the cable at an angle greater than 10%.
- The operation time should be no longer than 2 minutes.
- If the load gets stuck or stops, switch winch off immediately.

WARNING! Your winch is NOT designed for lifting. It is intended only for pulling a load.

- The winch is designed to take the strain of a load as a temporary manoeuvre.
- Ensure the winch is correctly connected to a 12V power supply and the connection to the battery is in accordance with the safe connecting and handling instructions for the battery.
- Keep the vehicle in neutral gear with the hand brake fully on and the wheels chocked with engine running whilst the winch is being used so that the battery is not drained.

WARNING! Keep hands, body and clothing always away from the winch components and the cable. Use protective gloves when handling cable.

- Keep non-essential persons away from the area and be aware of the location of other persons assisting you.

5.2 GENERAL WARNINGS

REVIEW ENTIRE MANUAL BEFORE INSTALLATION OR OPERATION OF WINCH.

DANGER

Do not disengage gear box while winch is under load. Immediate loss of load control will result.

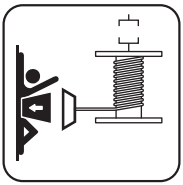

DANGER

The last five wraps of wire cable must be left on the drum to assist the wire clamp in holding the load.

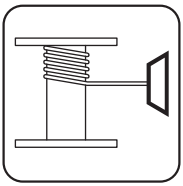

DANGER

Winches are not to be used for the lifting or moving of persons.

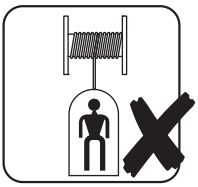

WARNING

Wire cable can break without warning. Always keep a safe distance from the winch and wire cable while under a load. Consult the wire cable manufacturer for wire cable ratings and maintenance procedures.

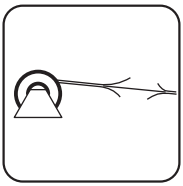

WARNING

Failure to adequately align, support, or attach winch to suitable mounting base could result in a loss of efficiency or premature failure of winch, wire cable, or mounting base.

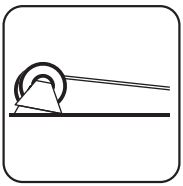

6. TECHNICAL DESCRIPTION

6.1 IDENTIFICATION

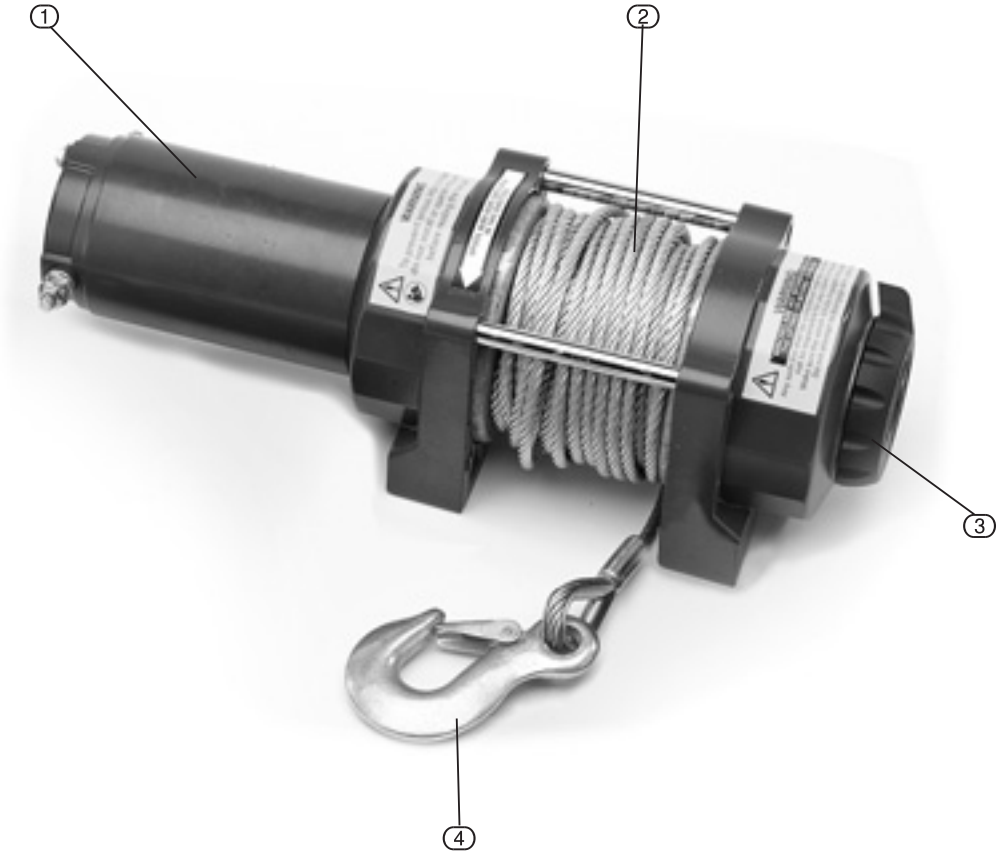

① Motor
② Cable
③ Clutch
④ Hook

7. UNPACKING & CHECKING

7.1 PACKAGING

Carefully remove the winch from the packaging and examine it for any sign of damage that may have happened during shipping. Lay the contents out and check them against the parts shown below. If any part is damaged or missing; please contact the Draper Helpline (the telephone number appears on the Title page) and do not attempt to use the winch.

The packaging material should be retained at least during the guarantee period: in case the machine needs to be returned for repair.

Warning! Some of the packaging materials used may be harmful to children. Do not leave any of these materials in the reach of children.

If any of the packaging is to be thrown away, make sure they are disposed of correctly; according to local regulations.

7.2 WHAT´S IN THE BOX?

As well as the winch; there are several parts not fitted or attached to it.

5 12V battery cables
6 Switch box
7 Switch socket
8 Mounting back plate
9 Control switch (Stock No.24443)
10 Hook tab
11 Fairlead
12 Thermal overload
13 Mounting straps
14 Control switch (Stock No.24441)

8. PREPARING THE WINCH

Before installation, reffer to vehicle manufacturer regarding specific mounting kit and/or mounting location.

If you choose not to use a mounting kit, your winch must be fitted to a secure and flat location.

NOTE: Your winch may not be able to be operated safely without some equipment included in a mounting kit.

Detailed mounting instructions for your specific vehicle are provided with each mounting kit from your vehicle manufacturer. Read and follow directions carefully.

CAUTION: This winch must be mounted with the wire cable in the underwound direction .

Your winch is designed to cable IN and cable OUT in one direction. Do not attempt to reverse the operation of your winch.

8.1 WINCH INSTALLATION

When installing a winch, your installation may vary depending upon your vehicle, mounting kit or structural support. It is recommended that you use a mounting kit designed for your vehicle (contact your vehicle manufacturer).

WARNING: Before you start your winch installation, disconnect the vehicle ground and positive leads from the battery.

8.2 MINIMUM ELECTRICAL REQUIREMENTS

Be sure to select the appropriate battery or power supply to handle this winch. If the winch is in heavy use, an auxiliary battery and heavy duty alternator are recommended.

8.3 INSTALLATION

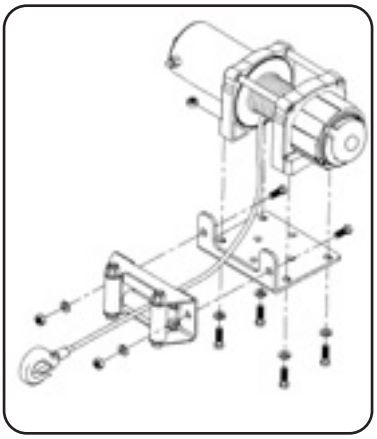

Step 1:

Install mounting kit or prepare a flat, secure mounting location for winch to make sure the motor, drum, and gearbox are aligned correctly. Carefully follow the instructions included with the mounting kit.

WARNING: Be sure structural support is strong enough to support rated capacity of the winch.

NOTE: If you choose not to use a mounting kit, you will need to drill holes in the structural support. Be sure that your structural support is at least 5mm (3⁄16") thick.

WARNING: If different length bolts, nuts, washers and other hardware are required for your installation, always use bolts, nuts, washers that equals or exceeds the strength grade of the supplied bolts, nuts, washers.

Step 2:

Position the winch over the holes in the mounting kit or structural support.

WARNING: As you position the winch, make sure that the wire cable winds in the proper rotation on the drum fig.1. Failure to operate the winch in the proper direction can cause the winch brake to operate improperly, and/or cause the winch to fail.

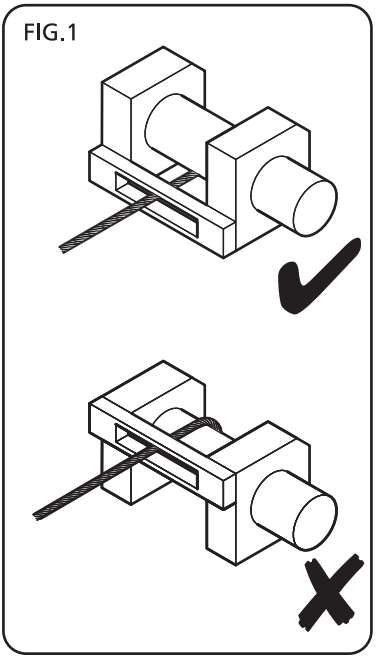

Step 3:

Secure winch to mounting kit or structural support using bolts, lock washers and square nuts supplied with winch.

Step 4:

Secure roller fairlead to mounting plate or structure support using hardware supplied or by using two (2) M8 x 20L 8.8 Grade High Tensile steels bolts.

WARNING: Be sure that both the mounting plate and winch hardware have been properly tightened.

CAUTION: No part of the vehicle (skidplates, wiring, auxiliary lights, tires, etc.) should impede the operation of your winch. When mounting, check all vehicle and winch parts for free operation. Be sure that the winch mounting location does not significantly reduce ground clearance.

8.4 SWITCH BOX INSTALLATION - FIG. 2

FIG.2

CAUTION: When attaching wires to the motor or solenoid terminals hold the inner nut with a wrench while tightening the outer nut with a second wrench. Do not allow the terminals to rotate in their housings. Rotation may cause internal wire breakage or part misalignment (Figure 2).

Step 1:

Check to ensure that the vehicle ground and positive leads from the battery are disconnected before performing any electrical work.

DANGER: DO NOT ATTEMPT TO INSTALL WIRING WHEN THE BATTERY IS CONNECTED. Automotive batteries contain flammable and explosive gases. Wear eye protection during installation and remove all metal jewellery. Do not lean over battery while making connections.

Step 2:

Route the wiring harness, attaching the harness to hard points on the vehicle with cable ties.

NOTE: When routing the wires, the appropriate terminals should be located near the battery, switch mounting point, and winch. Your installation requirements will vary depending upon your vehicle and winch. Make sure wires are long enough to reach the battery, switch mounting point and winch.

WARNING: Ensure that the wiring harness does not interfere or come in contact with any hot or moving engine, suspension, steering, braking or exhaust parts.

8.5 WIRING INSTALLATION

Step 3:

Check that all wiring is clear of sharp edges and pinch points.

Secure loose wiring with tie wraps or electrical tape.

WARNING: Before testing winch operation, be sure to reel off approximately two feet of wire cable.

TEST DRIVE

1. Double check that all wiring is correct and that there are no exposed terminals that can short to the vehicle frame.
2. Turn the ignition key to the ON position. Check winch for proper operation.

8.6 WIRE CABLE

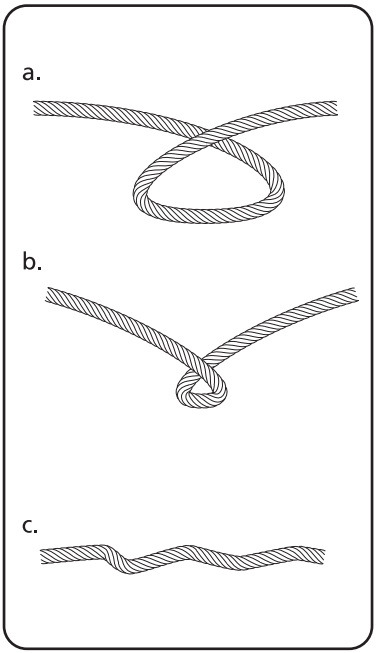

1. The life of the wire cable is directly related to the care it receives. The wire cable on a new winch, and any replacement cables, should be re-spooled under a minimum of 45kg load before using the winch. Failure to do this will result in wire cable damage. Inspect wire cable before use.Pinched, frayed or kinked areas severely reduce the load-carrying capacity.

   Replace damaged wire cable.
2. Prevent kinks before they occur.
   a. This is the start of a kink. At this time, the wire cable should be straightened.
   b. The wire cable was pulled and the loop has tightened to a kink. The wire cable is now permanently damaged and should not be used.
   c. The result of kinking is that each strand pulls a different amount causing the strands under greatest tension to break and reduce load capacity of the wire cable.
   3. When it is necessary to re-spool the wire cable under no load after use, hold the remote switch lead in one hand and the wire cable in the other. Start from as far from the vehicle as the remote switch will allow, activate the switch, walk in several feet of cable and release switch.

   Repeat the process. Always release the switch before your hand comes within four feet from the fairlead (if fitted).
4. Be sure the wire cable is distributed evenly and tightly on the drum. A loosely wound drum allows the wire cable to work its way down into the layers of wire cable on the drum and become wedged.
5. It is not advisable to grease or oil the wire cable due to dirt contamination that will reduce the wire cable life.

8.7 REPLACING THE WIRE CABLE

1. This should be done by an experience repair centre.

9. SETTING THE WINCH

9.1 PREPARING THE WINCH - FIGS. 3 - 4

DANGER: Wear heavy leather gloves when handling wire cable, even with gloves on. When handling the hook, always use hook tab. Never put your fingers into the hook. Placing finger(s) in hook could result in injury.

1. When anchoring the pulling vehicle, set the parking brake and block or chock the wheels. Keep the vehicle's foot brake depressed and place automatic and manual transmissions in neutral.

   WARNING: Inspect switch and wiring for cracks, pinched spots, frayed wire, or loose connections. A damaged, shorted lead could cause the winch to run as soon as it is plugged in.
2. When using the remote switch inside a vehicle, always pass it through a window to avoid pinching the wire in the door.

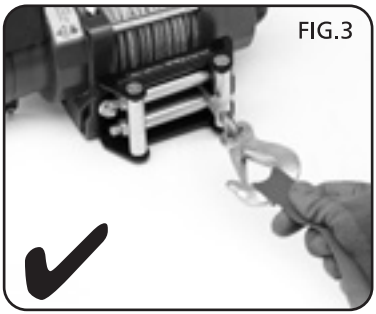
FIG.3

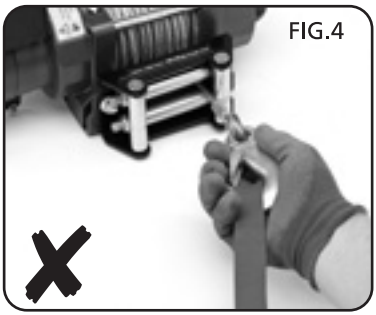
FIG.4

9.2 WINCHING

Winches should only be run by experienced operators.

A risk assessment should be carried out on all operations by an experienced professional.

There is three main **factors that need to be taken into account when using a winch:**

1. **Total weight** A vehicles total weight.
2. **Surface Drag** The type of terrain , or surface.
3. **Gradient Resistance** The incline or decline of surface.

1. **Total weight**
   Including fuel, passengers, cargo and equipment.

2. **Surface Drag**
   Is the most significant factor in winching.
   Assuming the vehicle is in proper working condition, a flat surface will use approximately 4% of its total weight to initiate motion.
   In opposition, a restrictive surface can require as much as 50% of the vehicles total weight.

Terrain Type	Surface Drag*
Hard flat road	4%
Grass	14%
Sand (hard, wet)	17%
Gravel	20%
Sand (soft, wet)	20%
Sand (soft, dry, loose)	25%
Shallow mud	33%
Bog	50%
Marsh	50%
Clay (clinging)	50%

*The values are approximate and are for reference only

3. **Gradient Resistance**
   For practical purposes, gradient resistance can be taken as 1/60th of the weight of the vehicle for each degree of the slope. Slope is defined as height versus the horizontal distance.

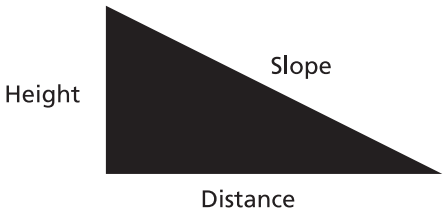

10. MAINTENANCE

10.1 CHECK BEFORE EACH USE

Before each use check the following to ensure all parts are sound and in good working order and condition:

Mounting fixing bolts and nuts, motor for correct operation, steel winch cable for fraying, kinks, broken strands or distortion,

operating switches and cables, power supply cables, clutch and brake to ensure loads will hold when switch is released.

If any parts are broken or damaged, do not use the winch, all service and maintenance must be undertaken by fully qualified personnel.

10.2. LUBRICATION

The winch is a sealed unit and has been fully lubricated at the time of manufacture. No additional lubrication should be necessary.

11. TROUBLESHOOTING

Problem	Cause	Remedy
Motor will not operate or only in one direction	1. Switch inoperative. 2. Broken wires or bad connection. 3. Damaged motor.	1. Replace switch. 2. Check for poor connections. 3. Replace or repair motor.
Motor runs extremely hot	1. Long period of operation. 2. Failed or removed overload. 3. Damaged motor.	1. Allow to cool. 2. Replace or repair overload. 3. Replace or repair motor.
Motor runs but with insufficient power or line speed	1. Weak battery. 2. Battery to winch wire too long. 3. Poor battery connection. 4. Poor ground. 5. Damaged motor.	1. Recharge or replace battery and check charging system. 2. Keep winch within distance allowed by lead wires. 3. Check battery terminals for corrosion and clean as required. 4. Check and clean connections. 5. Replace or repair motor.
Motor runs but drum doesn't turn	1. Clutch not engaged.	1. Engage clutch.
Winch runs backwards	1. Motor wires reversed. 2. Switch wires reversed. 3. Battery switch installed incorrectly.	1. Recheck wiring. 2. Recheck wiring. 3. Check battery connections.
Winch coasts	1. Excessive load.	1. Reduce load or double line.
Motor operations but stops	1. Excessive load/overload.	1. Allow to cool.

12. EXPLANATION OF SYMBOLS

12.1 EXPLANATION OF SYMBOLS

WEEE
Do not dispose of Waste Electrical & Electronic Equipment in with domestic rubbish

13. DISPOSAL

13.1 DISPOSAL

- At the end of the machine's working life, or when it can no longer be repaired, ensure that it is disposed of according to national regulations.
- Contact your local authority for details of collection schemes in your area.

  In all circumstances:
  - Do not dispose of power tools with domestic waste.
  - Do not incinerate.
  - Do not abandon in the environment.
  - Do not dispose of WEEE* as unsorted municipal waste.

* Waste Electrical & Electronic Equipment.

NOTES

CONTACTS

- **DRAPER TOOLS LIMITED,**
  Hursley Road, Chandler's Ford,
  Eastleigh, Hampshire. SO53 1YF. U.K.

- **Helpline:** (023) 8049 4344
- **Sales Desk:** (023) 8049 4333
- **Internet:** www.draper.co.uk
- **E-mail:** sales@drapertools.com
- **Sales Fax:** (023) 8049 4209
- **General Enquiries:** (023) 8026 6355

- **Service/Warranty Repair Agent**
  For aftersales servicing or warranty repairs, please contact the Draper Tools Helpline for details of an agent in your local area.

YOUR DRAPER STOCKIST

RDKC060812